DEFENDER HANGER ROD CANOPY

COMPONENT PROFILES

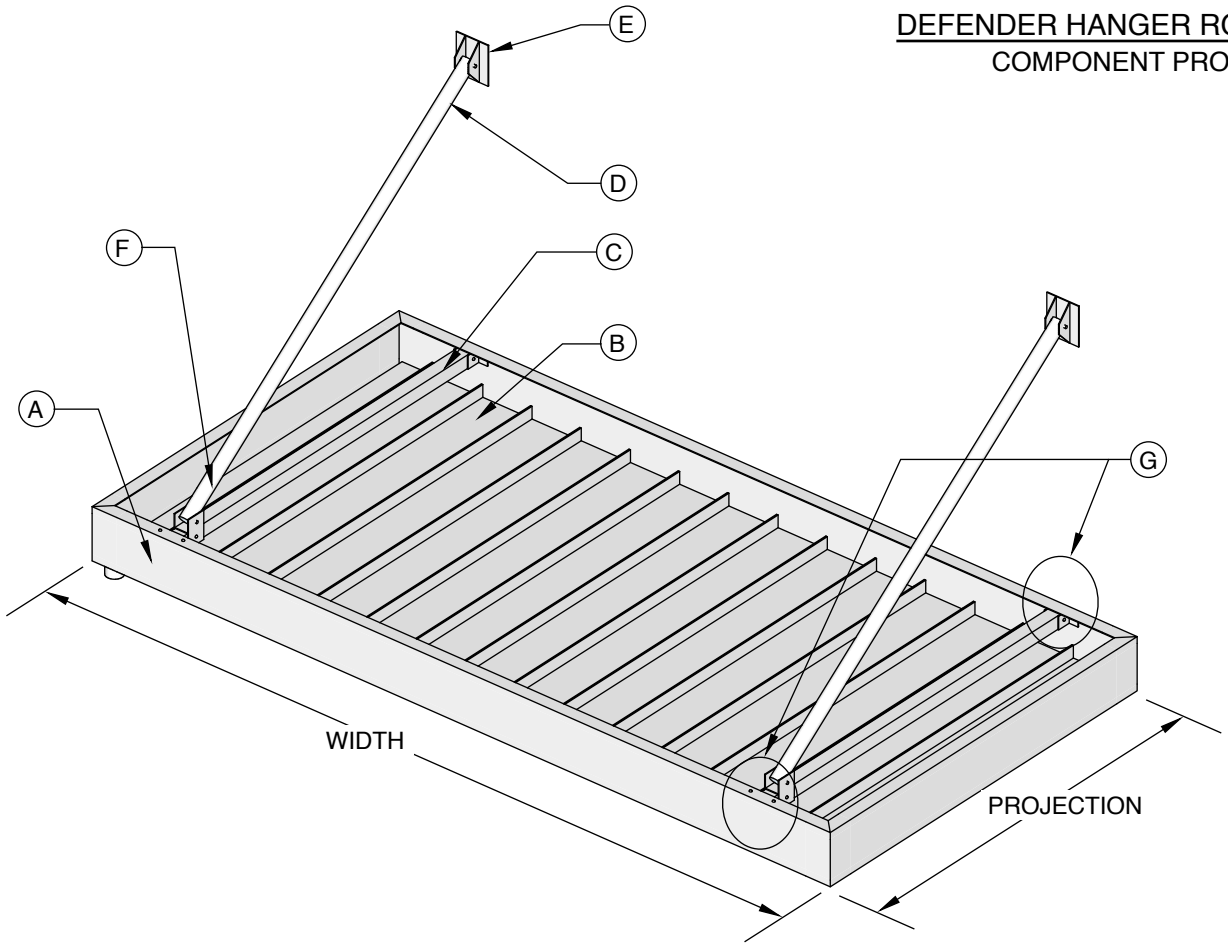

A GUTTER FASCIA

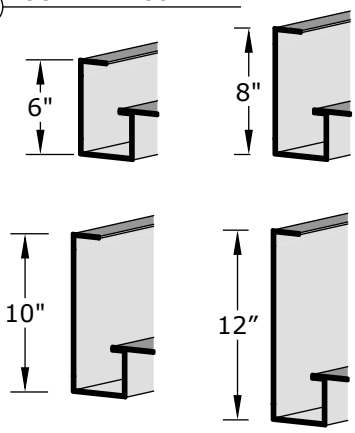

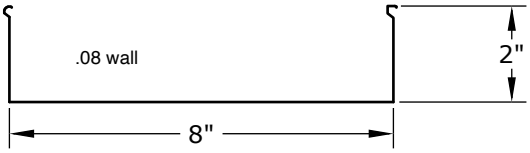

B ROOF DECK PROFILE

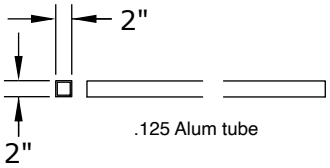

C PROJECTION TUBE

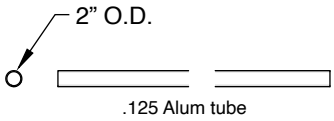

D DIAGONAL SUPPORT TUBE

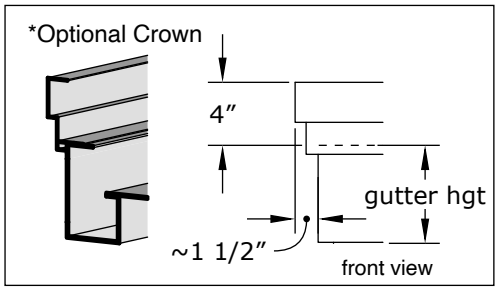

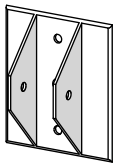

Alum.
thickness=.1875

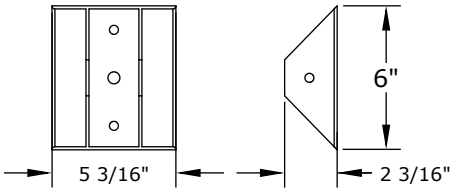

E MOUNTING BRACKET

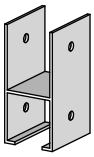

Alum.
thickness=.1875

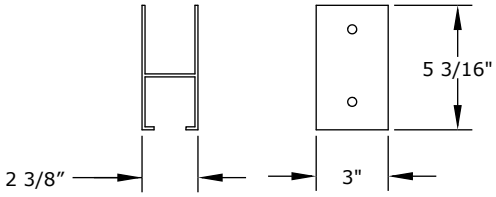

F SLIDE FITTING BRACKET

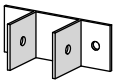

Alum.
thickness=.1875

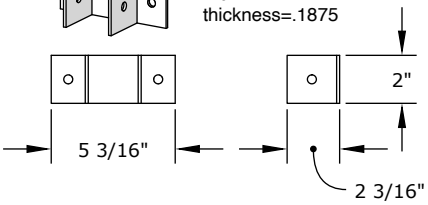

G FASCIA FITTING BRACKET

*Specifications and details subject to change without notice.

Queen City Awning
Cincinnati Ohio
QueenCityAwning.com 800-611-2800

© 2023 QUEEN CITY AWNING